SH VW 600

Pop-Out Video Wall Mount

Fit for most 45"-75" flat panel TVs

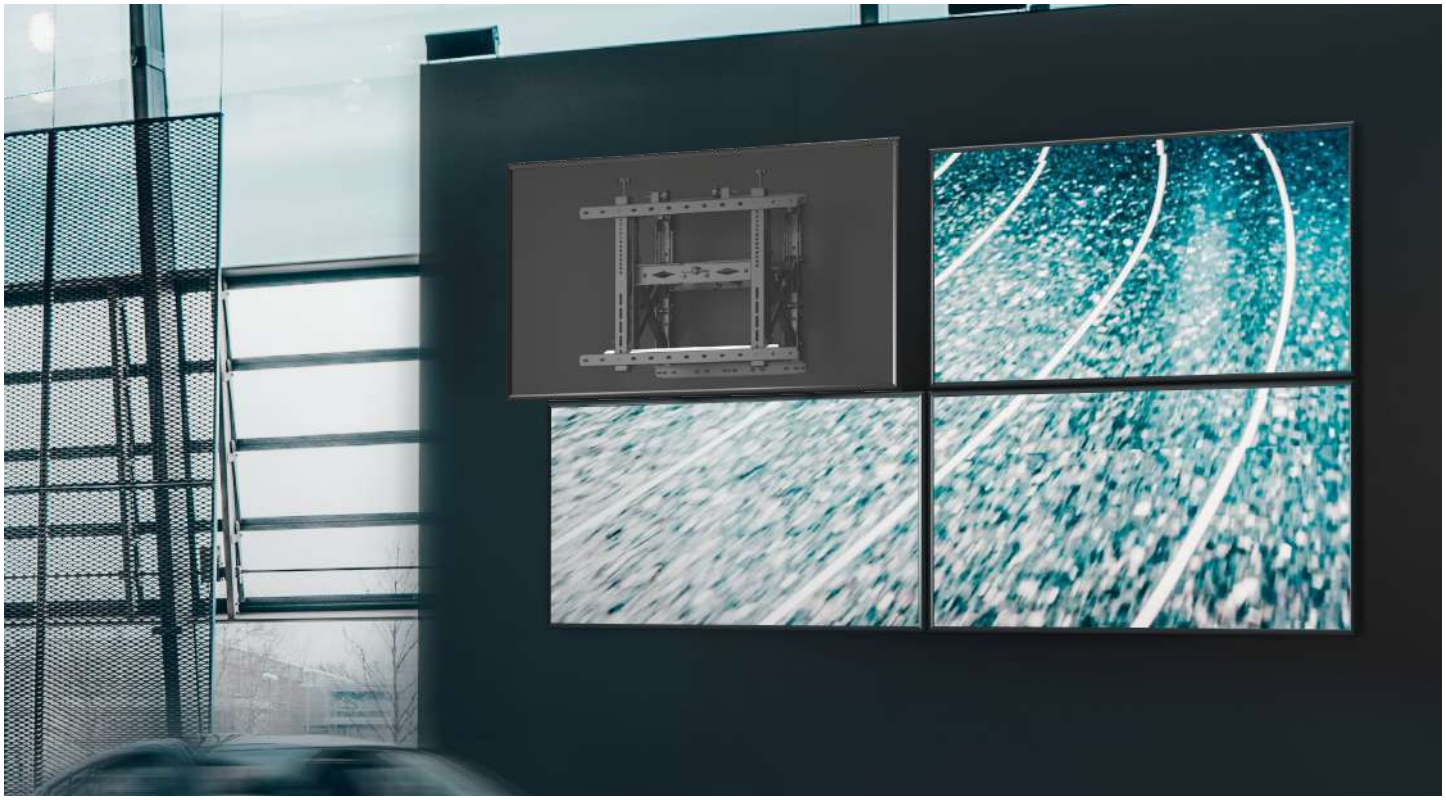

Easily pop-out & quick-lock mechanism

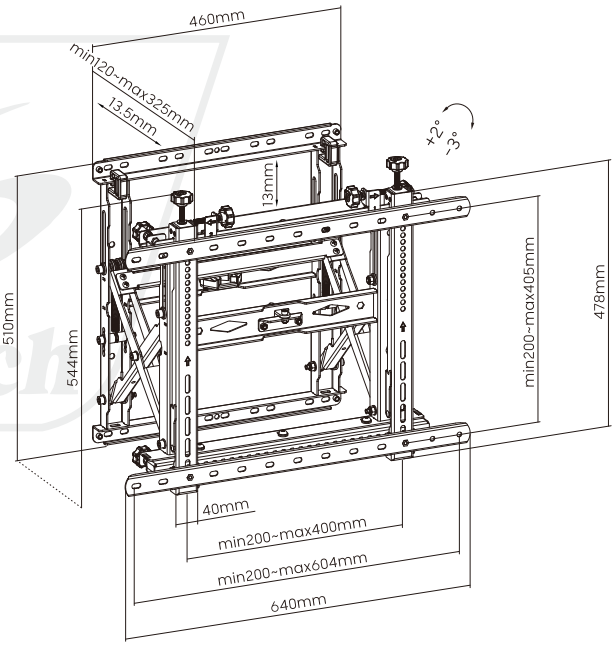

Screen Size	VESA Compatible	Profile to wall	Tilt Range	Weight Capacity	Anti-theft
45"-75"	**200x200 300x200 400x200 300x300 400x300 400x400 600x400**	**120-325mm/ 4.7"-12.8"**	**+2°--3°**	**70kg/154lbs**	

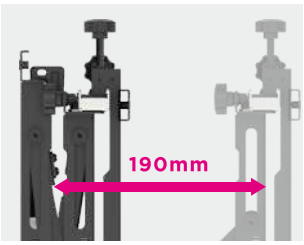

Push to Open or Close
easy to pop-out for quick service access.

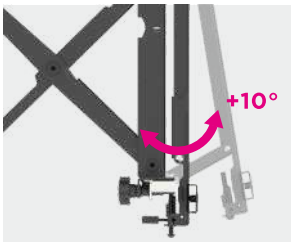

Kick-Stands
provides 10° tilt for maintenance.